NO	DESCRIPTION	MATERIAL	Q'TY	FINISH	REMARK
1	BODY 1	BE CU	1	GOLD	B-MCX0129-G
2	BODY 2	BRASS	1	GOLD	B-MCX0130-G
3	INSULATION 1	TEFLON	1	TEFLON	I-0102T
4	PIN	BRASS	1	GOLD	P-MCX0018-G
5	INSULATION 2	TEFLON	1	TEFLON	I-0113T
6	WASHER	BRASS	1	GOLD	W-0017-G
7	RING	BRASS	1	GOLD	R-0001-G

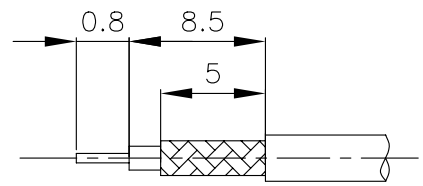

(Recommended Stripping Dimmension)

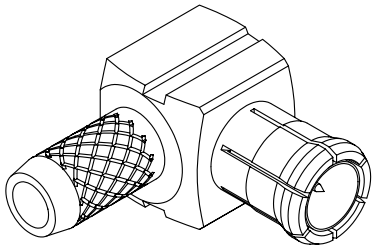

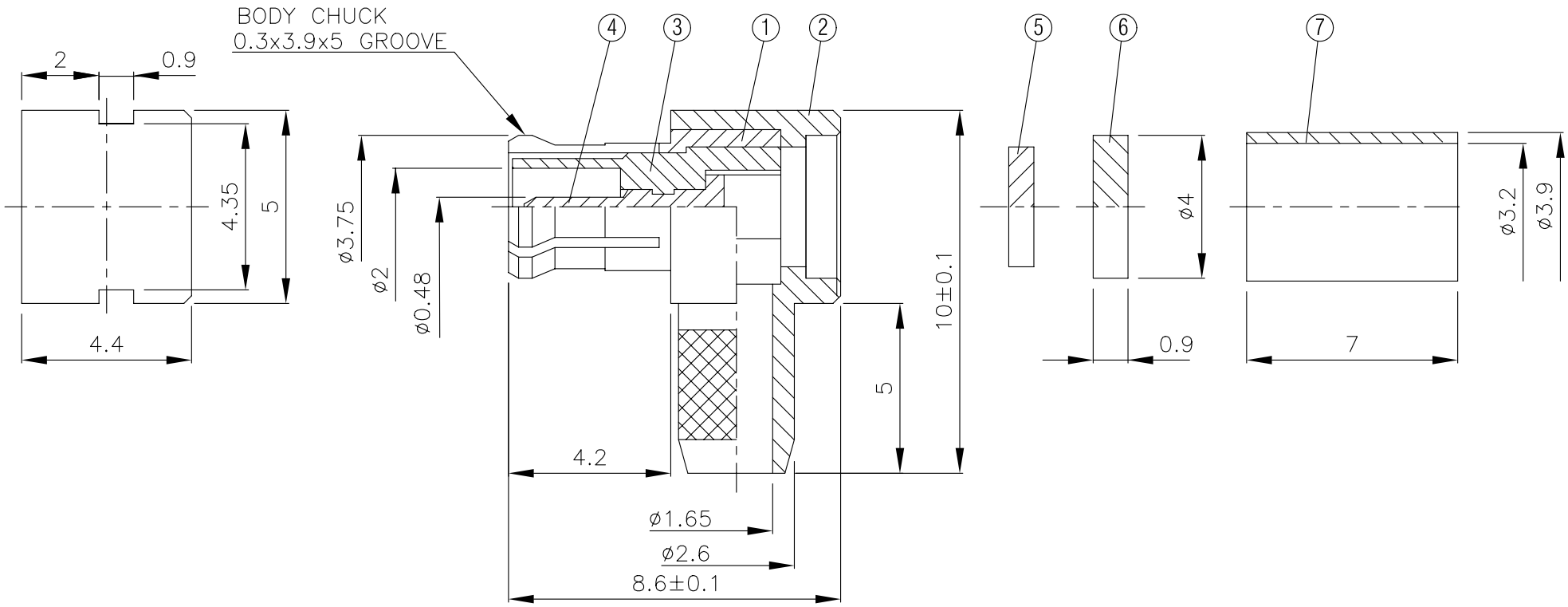

HUS-TSAN GROUP CO., LTD.
P.O.BOX 40-76.TAINAN.TAIWAN,R.O.C.

TITLE MCX MALE ANGLE CRIMP FOR RG174U,316U

PART NO. MCX-04LV1-TGG

DRAWING NO. MCX 04LV1 TGG

DRAWN	MARY	DATE	90.10.16
CHECKED	黃巧君	DATE	96.01.09
Q.A.	蘇姿潔	DATE	
APPROVAL	徐燦霖	DATE	
REVISION		DATE	

DIMENSIONS ARE IN MILLMETERS

UNLESS OTHERWISE SPECIFIED TOLERANCE

0.5-5=±0.2	120-315=±1
5-30= ±0.4	315-1000=±1.6
30-120±0.6	1000-2000=±2.4

SCALE	4:1	SIZE	A

REVISION

DESCRIPTION	ENGINEER